TECHNICAL SPECIFICATIONS - RPSI

GENERAL SPECIFICATIONS:

RPSI direct evaporative coolers are designed to supply large volumes of 100% fresh, cool, outside air offering a cost-effective solution for ventilating and cooling large, open spaces.

RPSI is available in 2 different capacities with the option of Down (D), Side (S), or Top (T) discharge directions to suit a variety of installation requirements.

CABINET

The cabinet is constructed from painted marine grade aluminium, incorporating channel section corner pillars, mounted on a heavy gauge galvanised steel base frame for structural stability. Internal components and cabinet fasteners are stainless steel, aluminium. Outer panels are painted "Basalt" grey.

Connection surfaces are provided for outlet air ductwork to be fitted using established industry practices, including flexible duct connectors for Side (S) and Top (T) discharge options.

FAN

The fan is a forward curved centrifugal blower and moulded from plastic. The fan scroll is moulded from plastic for corrosion protection. The motor is electronically commutated permanent magnet, incorporating sealed ball bearings. The motor rotor is external to the stator and is injection moulded from glass reinforced fire resistant polymer. For safety, the motor is fitted with auto re-set overload protection.

MOTOR

The fan motor is an electronically commutated permanent magnet motor, incorporating sealed ball bearings. The motor rotor is external to the stator and directly coupled to the fan providing high efficiency at 10 different speeds. For safety, the motor is manufactured from injection moulded glass reinforced fire resistant polymer and fitted with auto re-set overload protection.

COOLING PADS

The cooler is fitted with either Chillcel® (C) fabricated, honeycomb, high efficiency filter pads or Aspen (A) shredded wood wool fibre pads (RPSI2800 only). Pads are located in moulded plastic UV stabilised louvres to enhance the appearance of the unit, protect the pads and minimize water splash.

ELECTRICAL

The electrical control box is pre-wired within the cooler and incorporates an isolating switch. A 4m long power supply cord is supplied as standard on all models. Provision is included in the control box for plug-in connection of optional Water Manager kits.

CONTROL

All RPSI model coolers are compatible with the full range of Seeley MagIQtouch® and MagIQcool wall controls. Connection of the wall control to the cooler is via a 20m low voltage cable. Wi-Fi, RF, BMS and Switch Plate control options are also available.

WATER

Water is held in an internal reservoir manufactured from moulded polymer to ensure durability and corrosion resistance.

The pump is manufactured from engineering plastics, with a stainless steel shaft and fully encapsulated motor with thermal overload protection. It is fitted with an easily cleanable strainer within the reservoir section.

Water supply connection is 1/2" BSP. A float valve is used to control water level in the cooler. The cooler is fitted with a continuous bleed system to control water salinity in the unit and an overflow is provided to allow the unit to be connected to drainage.

An optional Water Manager Kits is available for improved salinity management and automatic drainage.

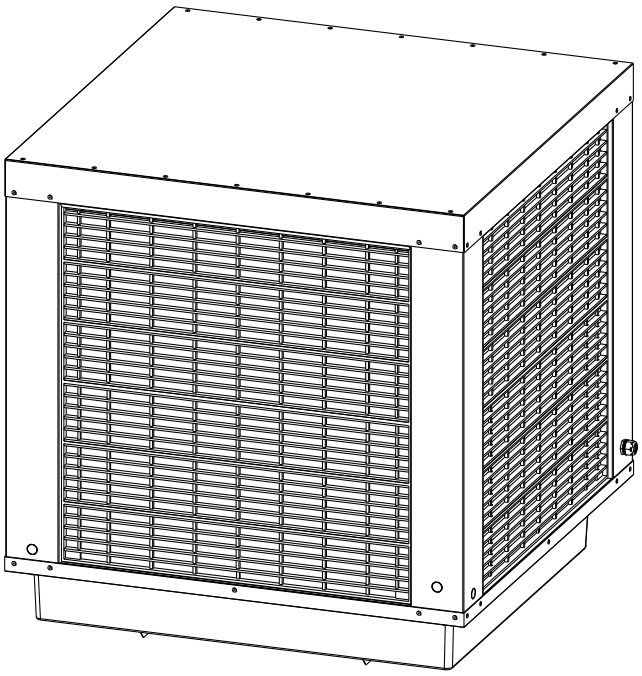

It is a policy of Seeley International to introduce continual product improvement.
Accordingly, specifications are subject to change without notice.

TECHNICAL SPECIFICATIONS - RPSI

DOWN DISCHARGE

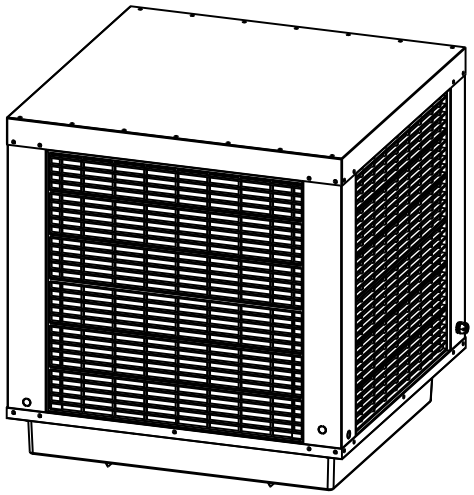

TOP VIEW

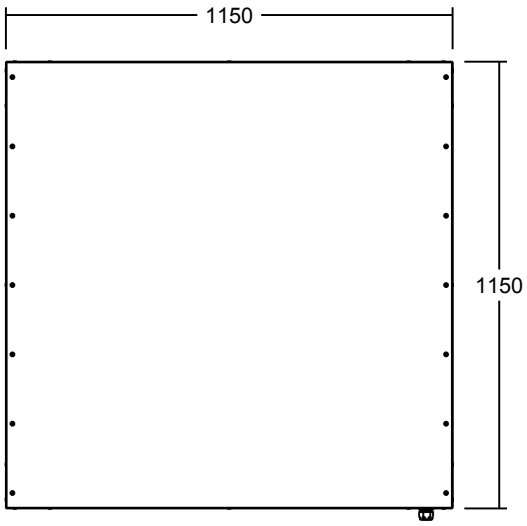

REAR VIEW

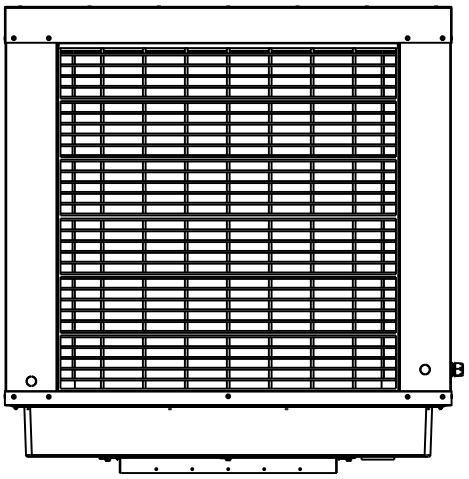

SIDE VIEW

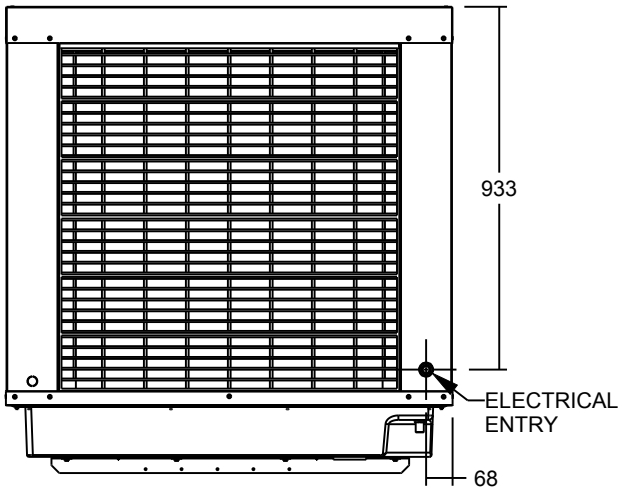

FRONT VIEW

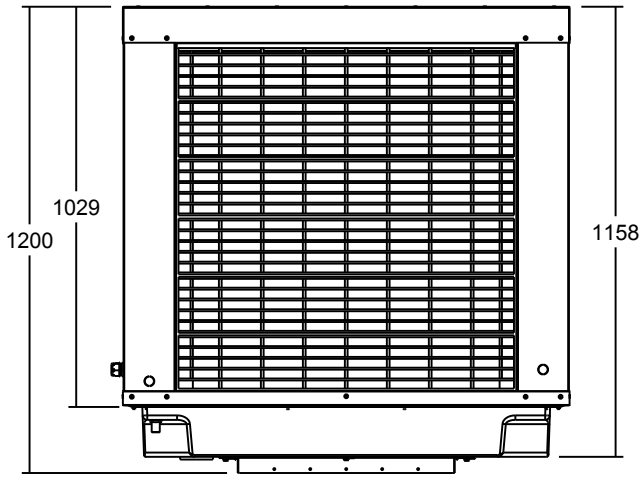

BOTTOM VIEW

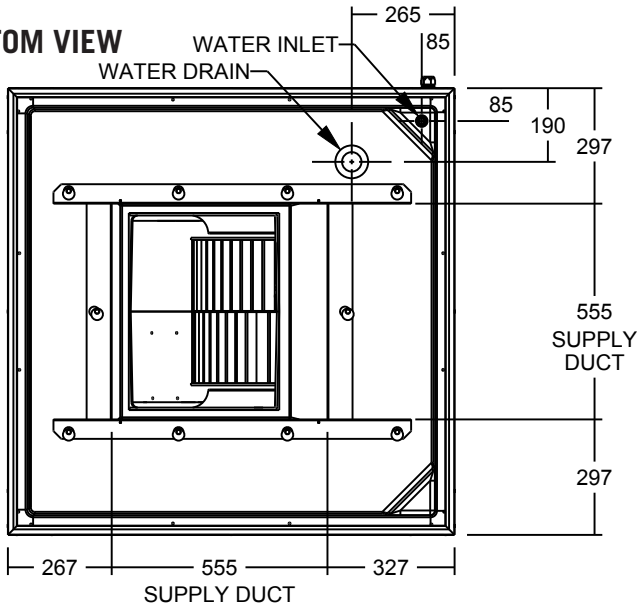

Dimensions are in mm

It is a policy of Seeley International to introduce continual product improvement.
Accordingly, specifications are subject to change without notice.

TECHNICAL SPECIFICATIONS - RPSI

SIDE DISCHARGE

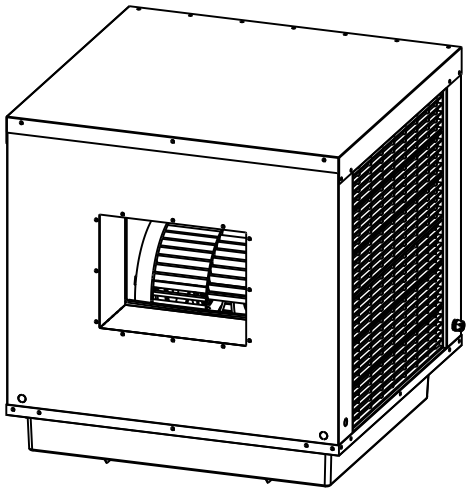

TOP VIEW

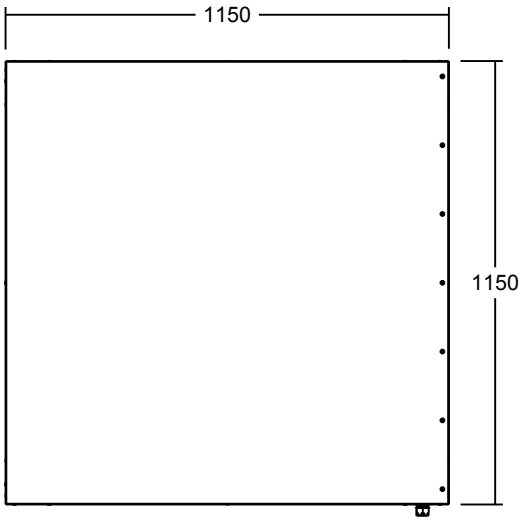

REAR VIEW

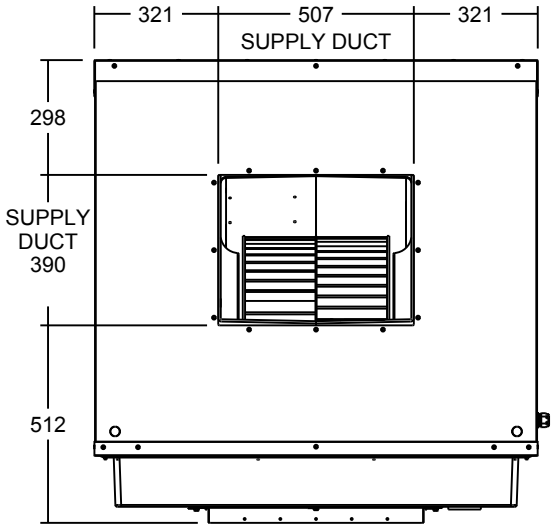

SIDE VIEW

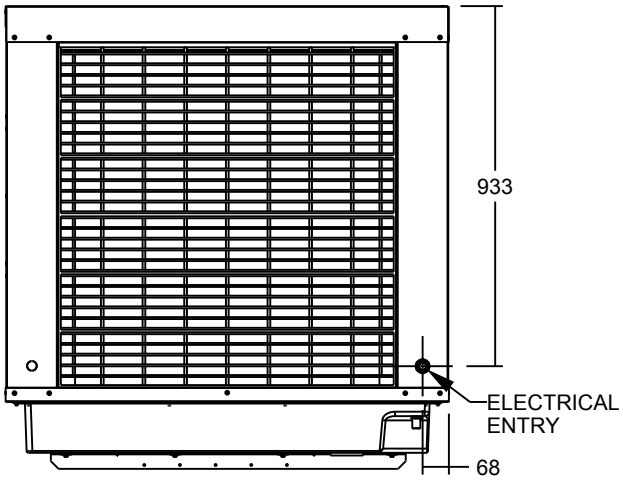

FRONT VIEW

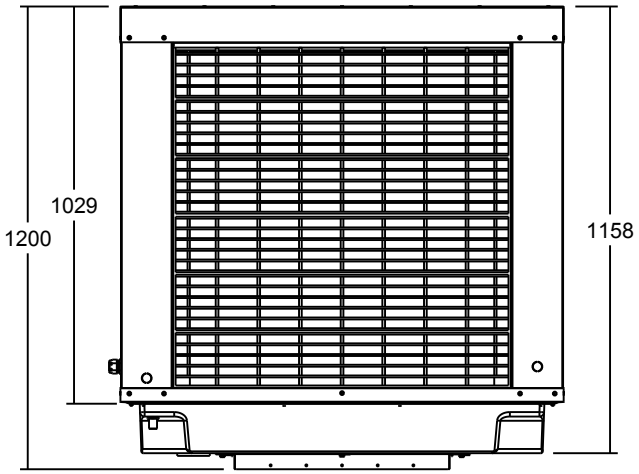

BOTTOM VIEW

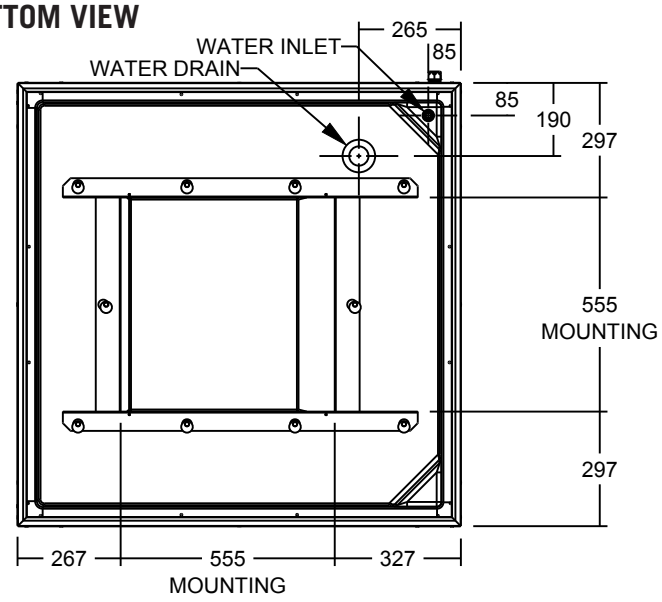

Dimensions are in mm

It is a policy of Seeley International to introduce continual product improvement.
Accordingly, specifications are subject to change without notice.

TECHNICAL SPECIFICATIONS - RPSI

TOP DISCHARGE

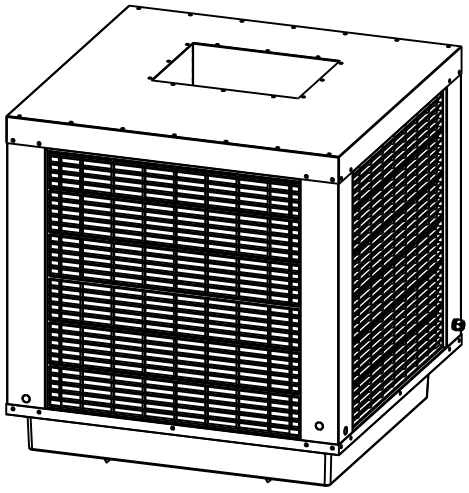

TOP VIEW

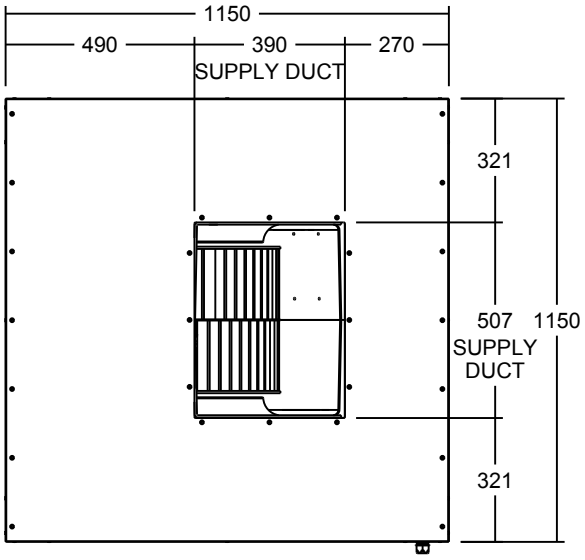

REAR VIEW

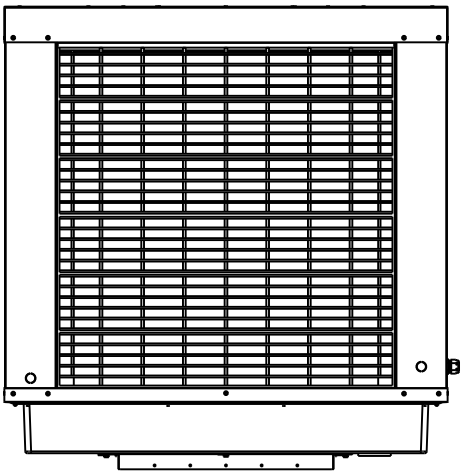

SIDE VIEW

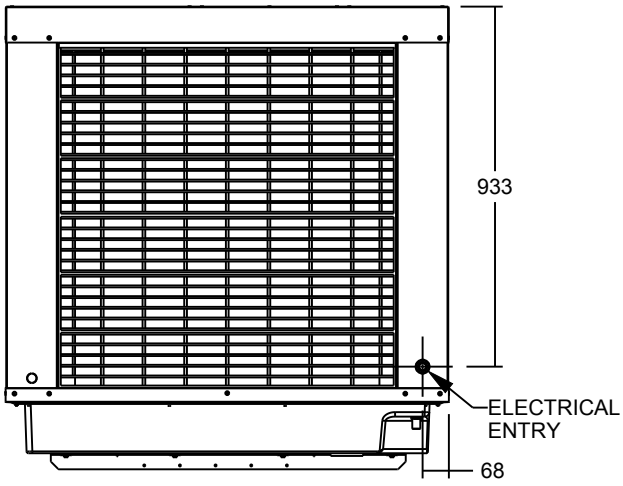

FRONT VIEW

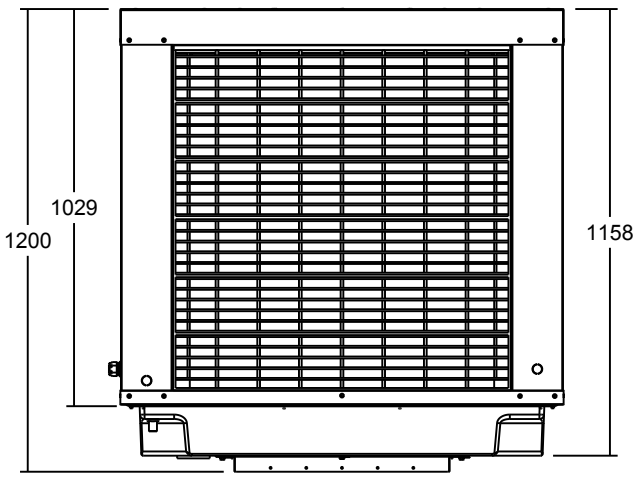

BOTTOM VIEW

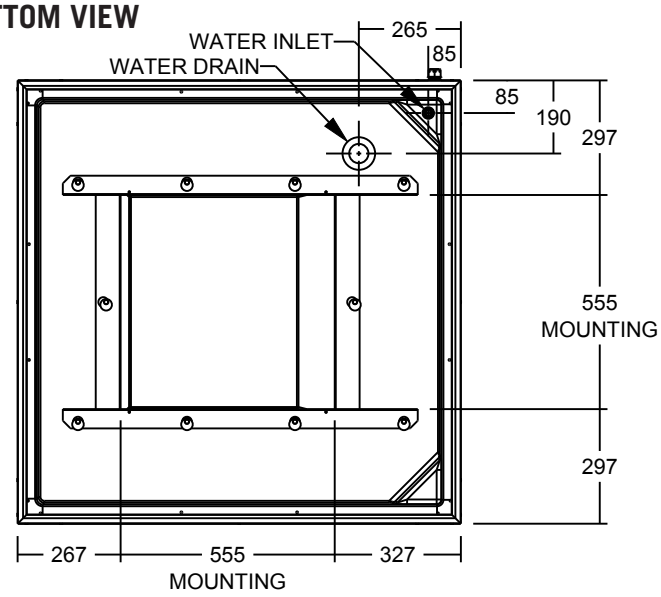

Dimensions are in mm

It is a policy of Seeley International to introduce continual product improvement.
Accordingly, specifications are subject to change without notice.

TECHNICAL SPECIFICATIONS - RPSI

MODEL			RPSI2500 DOWN / TOP	RPSI2500 SIDE	RPSI2800 DOWN / TOP	RPSI2800 SIDE
PERFORMANCE	Cooling Capacity* @ 80Pa		9.0 kW (Chillcel®)	8.3 kW (Chillcel®)	10.8 kW (Chillcel®) 9.1 kW (Aspen)	9.7 kW (Chillcel®) 9.7 kW (Aspen)
SERVICES	Electrical	Voltage	230-240V / 1~ / 50Hz	230-240V / 1~ / 50Hz	230-240V / 1~ / 50Hz	230-240V / 1~ / 50Hz
		Rated Current	6 A	6 A	9 A	9 A
		Input Power	1.3 kW	1.3 kW	1.9 kW	1.9 kW
	Water	Supply	20 L/m 100kPa - 800kPa	20 L/m 100kPa - 800kPa	20 L/m 100kPa - 800kPa	20 L/m 100kPa - 800kPa
		Max Temperature	40 ºC	40 ºC	40 ºC	40 ºC
		Inlet	1/2" Male BSP	1/2" Male BSP	1/2" Male BSP	1/2" Male BSP
		Drain	1-1/2" Male BSP	1-1/2" Male BSP	1-1/2" Male BSP	1-1/2" Male BSP
		Drain Flow Rate	15 L/min	15 L/min	15 L/min	15 L/min
	Duct Connections		550 x 550mm Down 390 x 507 Top	390 x 507 Side	550 x 550mm Down 390 x 507 Top	390 x 507 Side
AIR SYSTEMS	Fan	Fan	Centrifugal	Centrifugal	Centrifugal	Centrifugal
		Size	460mm	460mm	460mm	460mm
	Motor	Type	Variable Speed, ECM	Variable Speed, ECM	Variable Speed, ECM	Variable Speed, ECM
		Power	750 W	750 W	1500 W	1500 W
		Max Speed	510 rpm	510 rpm	680 rpm	680 rpm
		Overload	Auto Reset	Auto Reset	Auto Reset	Auto Reset
		IP Rating	IPX2	IPX2	IPX2	IPX2
COOLING PADS	Material & Size		4x Chillcel® 797 x 885 x 90mm	3x Chillcel® 797 x 885 x 90mm	4x Chillcel® Pads 797 x 885 x 90mm or 4x Aspen Pads 797 x 885 x 70mm	3x Chillcel® Pads 797 x 885 x 90mm or 3x Aspen Pads 797 x 885 x 70mm
WATER SYSTEMS	Reservoir Capacity		67 L	67 L	67 L	67 L
	Pump	Type	Centrifugal	Centrifugal	Centrifugal	Centrifugal
		Power	25W	25W	25W	25W
		Max Flow Rate	21 L/min	21 L/min	21 L/min	21 L/min
		Voltage	230-240V / 1~ / 50Hz	230-240V / 1~ / 50Hz	230-240V / 1~ / 50Hz	230-240V / 1~ / 50Hz
		IP Rating	IPX4	IPX4	IPX4	IPX4
	Optional Water Manager Kit (sold separately)	Inlet Valve	24 VAC Solenoid Valve	24 VAC Solenoid Valve	24 VAC Solenoid Valve	24 VAC Solenoid Valve
		Water Probes	2-pin Conductivity Probe	2-pin Conductivity Probe	2-pin Conductivity Probe	2-pin Conductivity Probe
		Drain Valve	24 VAC Vertical	24 VAC Vertical	24 VAC Vertical	24 VAC Vertical
DIMENSIONS	Shipping		1200mm Long x 1200mm Wide x 1325mm High	1200mm Long x 1200mm Wide x 1325mm High	1200mm Long x 1200mm Wide x 1325mm High	1200mm Long x 1200mm Wide x 1325mm High
	Operating		1150mm Long x 1150mm Wide x 1200mm High	1150mm Long x 1150mm Wide x 1200mm High	1150mm Long x 1150mm Wide x 1200mm High	1150mm Long x 1150mm Wide x 1200mm High
WEIGHT	Shipping		120 kg	110 kg	120 kg	110 kg
	Operating inc. water		140 kg	130 kg	140 kg	130 kg

*Down discharge model tested to Australian Standard AS 2913-2000 with design condition of: 38ºC dry-bulb, 21ºC wet-bulb and 27.4ºC room exit temperature.

It is a policy of Seeley International to introduce continual product improvement.
Accordingly, specifications are subject to change without notice.

TECHNICAL SPECIFICATIONS - RPSI

SPEED 10 PERFORMANCE SUMMARY*									
EXTERNAL STATIC PRESSURE (Pa)		280	240	200	160	120	80	40	0
RPSI2500	AIRFLOW (L/s)	1025	1330	1560	1760	1950	2130	2290	2400
	AIRFLOW (m/h)	3710	4790	5615	6335	7020	7670	8245	8640
	INPUT POWER (W)	940	1005	1065	1110	1170	1200	1240	1270
RPS2800	AIRFLOW (L/s)	1570	1840	2050	2230	2390	2530	2650	2740
	AIRFLOW (m/h)	5650	6625	7380	8030	8605	9110	9540	9865
	INPUT POWER (W)	1405	1520	1640	1745	1825	1885	1925	1945

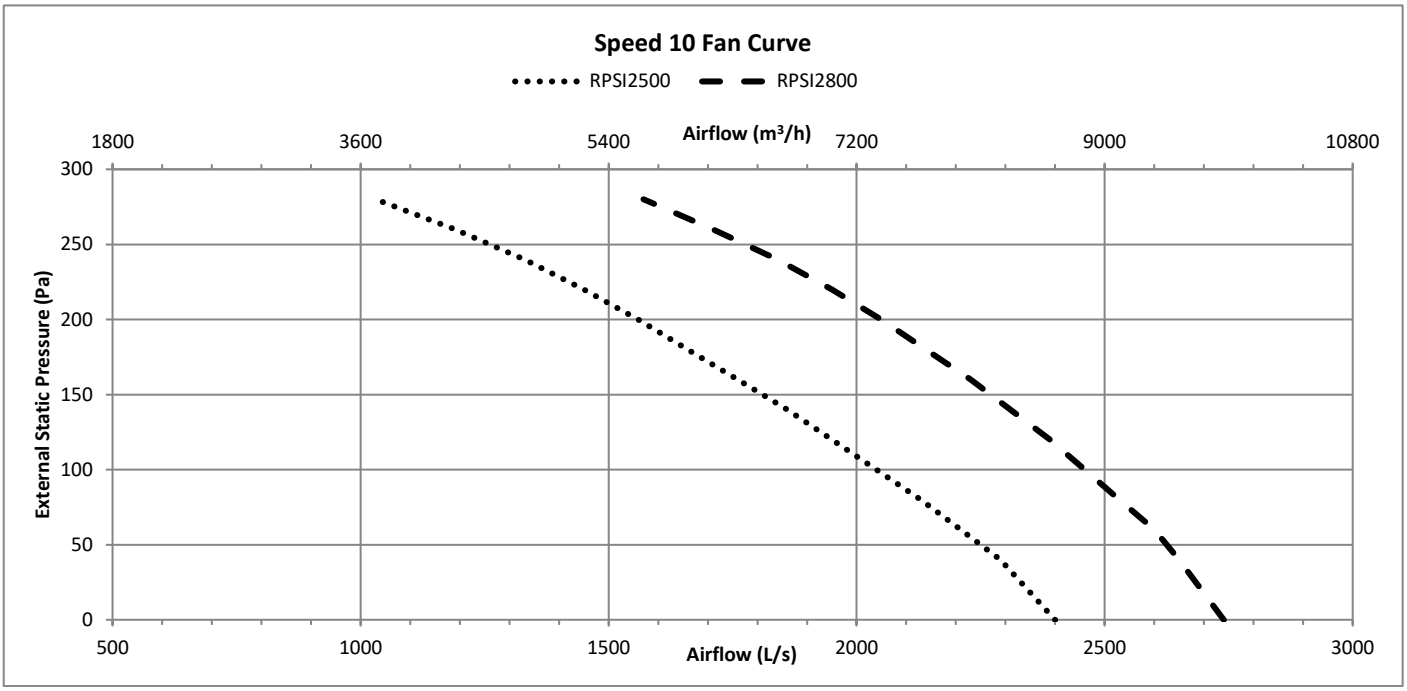

Air flow performance has been measured in accordance with Australian Standard AS2913:2000 "Evaporative Air Conditioning Equipment" by Meridian Laboratories Pty Ltd

*Meridian Laboratories is registered by the National Association of Testing Authorities, Australia. The tests reported herein have been performed in accordance with its terms of registration. Registration No.: 3697

MAGIQTOUCH CONTROLS

RPSI is compatible with a wide range of MagIQtouch® control solutions, including Wall Controllers, Building Management System (BMS) Controllers and Sensor Accessories.

Contact your local Sales office for compatible kits and installation literature.

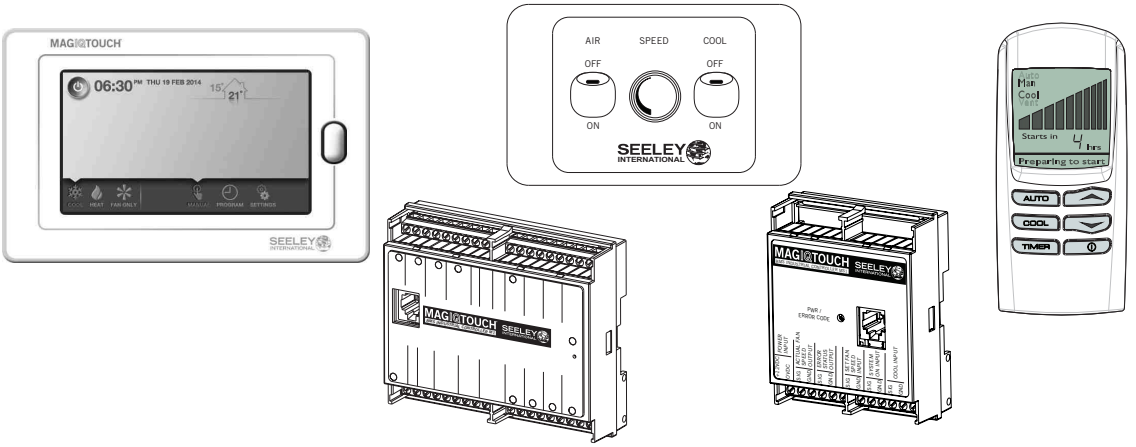

It is a policy of Seeley International to introduce continual product improvement.
Accordingly, specifications are subject to change without notice.